www.puig.tv
www.puigusa.com
info@puig.tv
info@puigusa.com

KAWASAKI ZH2 '20-

M O U N T I N G I N S T R U C T I O N S

REF 20832 — ALERONES DOWNFORCE NAKED / NAKED DOWNFORCE SPOILERS

1 Person

15 min

EASY

Nº 11

ALLEN
Nº 3
Nº 5

ID	PIEZA/PART	DESCRIPCIÓN	DESCRIPTION	QTY	REF
1		Deflector alerón	Spoiler deflector	2	10846N /R/VM3
2	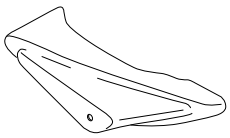	Aleron superior derecho	Upper right spoiler	1	10845JM3
3	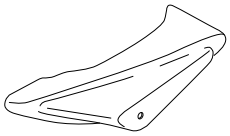	Aleron superior izquierdo	Upper left spoiler	1	10845JM3
4	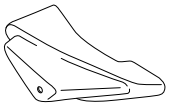	Aleron inferior derecho	Lower right spoiler	1	10845JM3
5		Aleron inferior izquierdo	Lower left spoiler	1	10845JM3
6	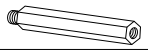	Tornillo especial M6x8 long Hex.80 (M5x20)	Special screw M6x8 Hex. Length 80 (M5x20)	4	TORNI-EM6---884
7		Tornillo Allen M5x16 Ø11 ISO 7380	M5x16 Ø11 ISO 7380 Allen screw	4	TORNI-I7380-493
8		Arandela de goma Ø4,5x Ø11x 2 mm	Ø4,5x Ø11x 2 mm Rubber washer	4	ARAND-EPDM--722
9		Arandela de nylon M5x1	M5x1 nylon washer	8	ARNV0000000245
10		Tapón tornillo M5 ISO 7380	M5 ISO 7380 screw cap	4	TAPON--------85

* Algunos componentes se suministran montados.
Some components are supplied assembled.

V0.10/21
Illustrations and layout by: www.ciandisseny.com

KAWASAKI ZH2 '20-

INSTRUCCIONES DE MONTAJE - MOUNTING INSTRUCTIONS - MONTAGEANLEITUNG

Se muestra el montaje del lado izquierdo a modo de ejemplo, realizar los mismos pasos para el montaje del lado derecho.
The left side assembly is shown as an example, so the same steps can be performed for the right side assembly.

1 DISASSEMBLY / DESMONTAJE

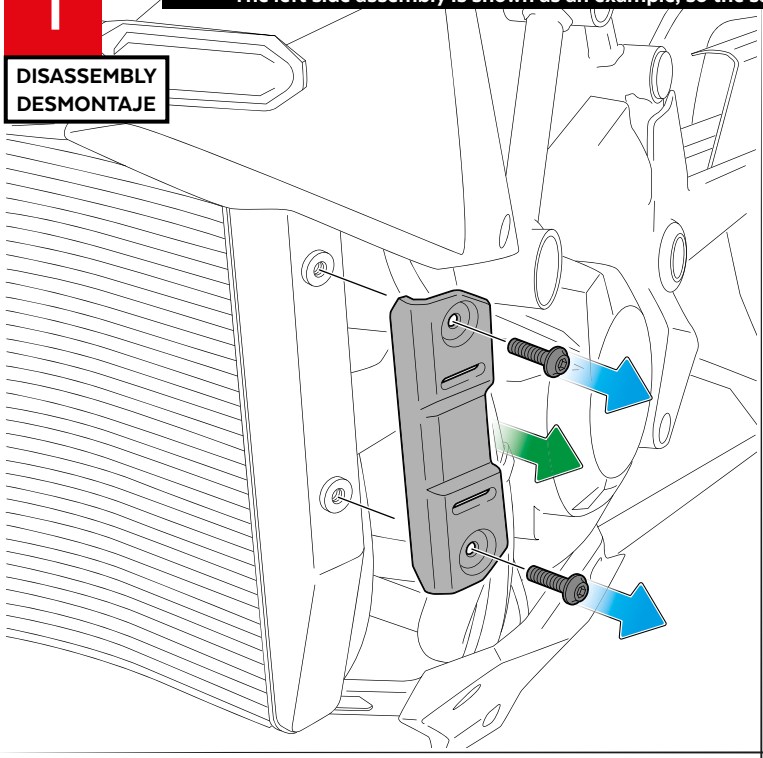

2 ASSEMBLY / MONTAJE

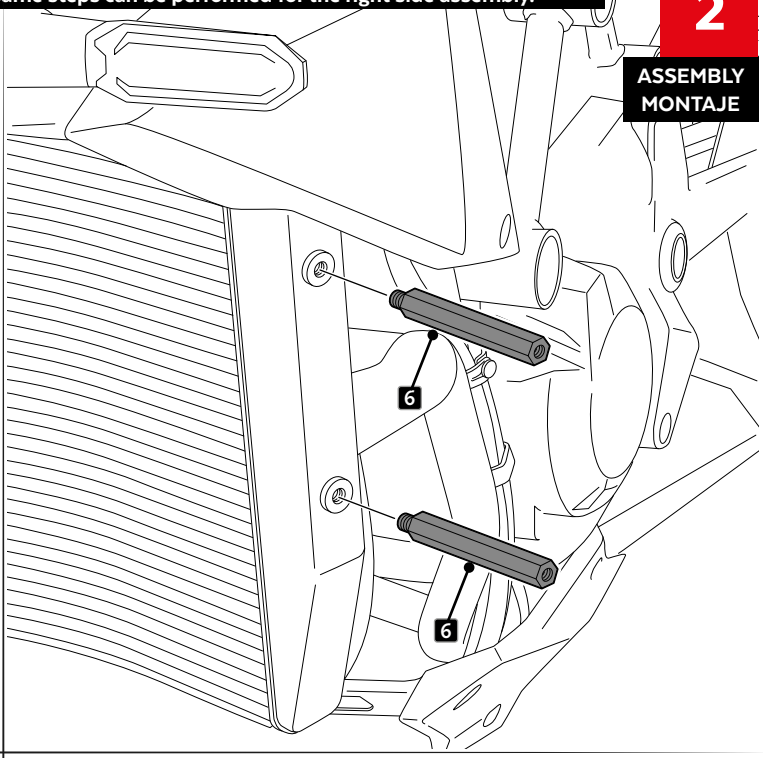

3a ASSEMBLY / MONTAJE

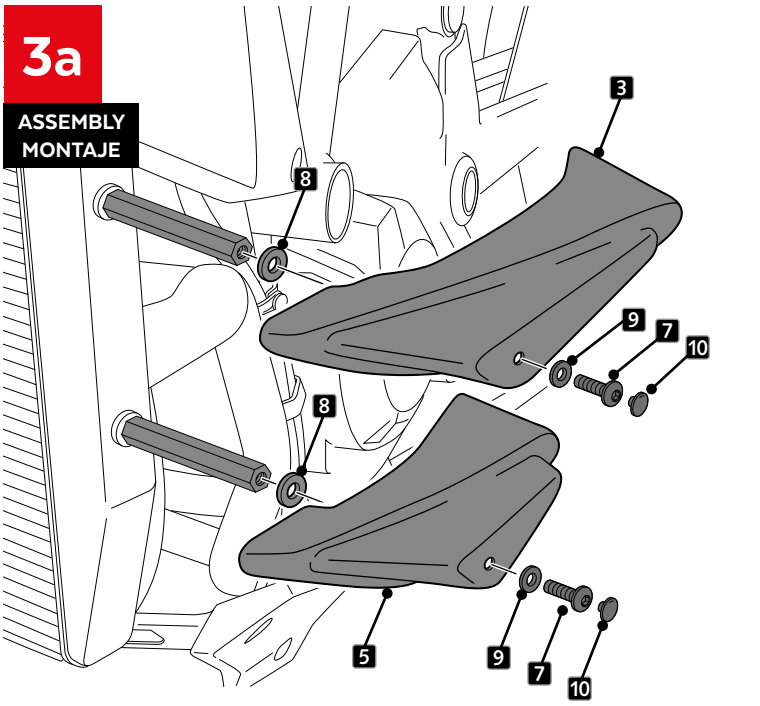

ASSEMBLY WITHOUT DEFLECTORS
MONTAJE SIN DEFLECTOR

3b ASSEMBLY / MONTAJE

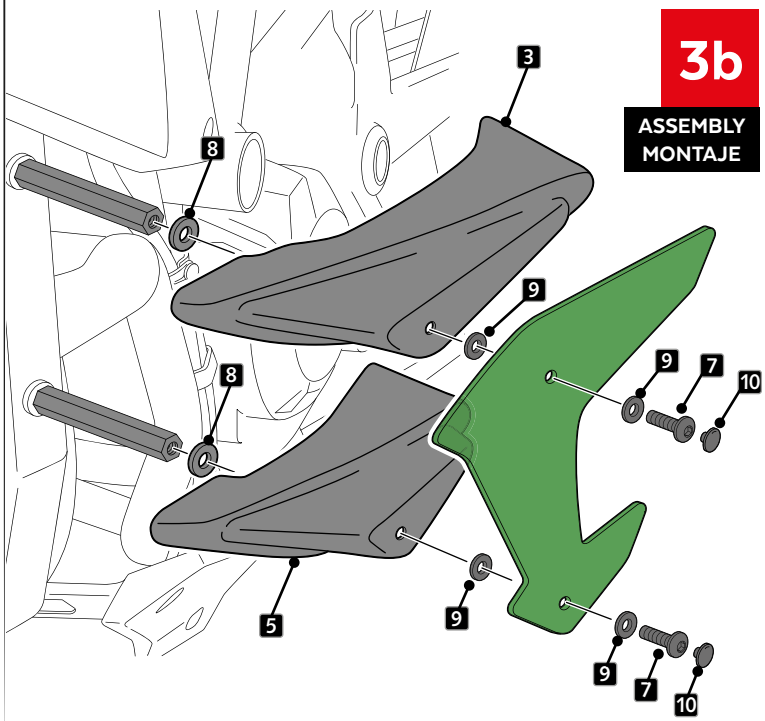

ASSEMBLY WITH DEFLECTORS
MONTAJE CON DEFLECTOR

Illustrations and layout by: www.ciandisseny.com

CFD FLOW SIMULATION

DOWNFORCE NAKED SPOILERS

REF.20832

AERODYNAMIC TEST

KAWASAKI Z H2

2020-

Puig Hi-Tech Parts

DRAG FORCE COMPARISON

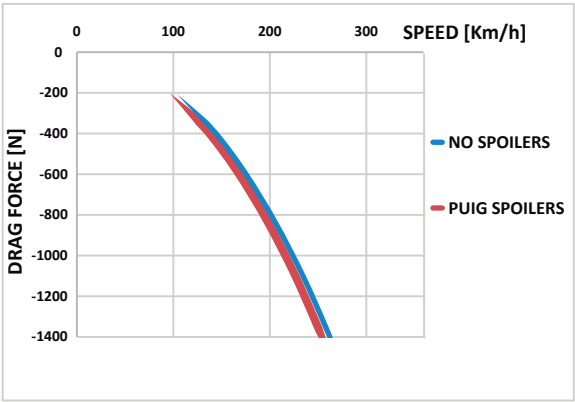

Drag force - Speed Chart:

On this chart we can see the force that our bike has to overcome to advance depending on the speed we are travelling at. As we can observe this force is practically the same with the *Puig* Downforce Race Spoilers. So we will gain downforce without affecting bike speed.

WITHOUT SPOILERS / PUIG SPOILERS

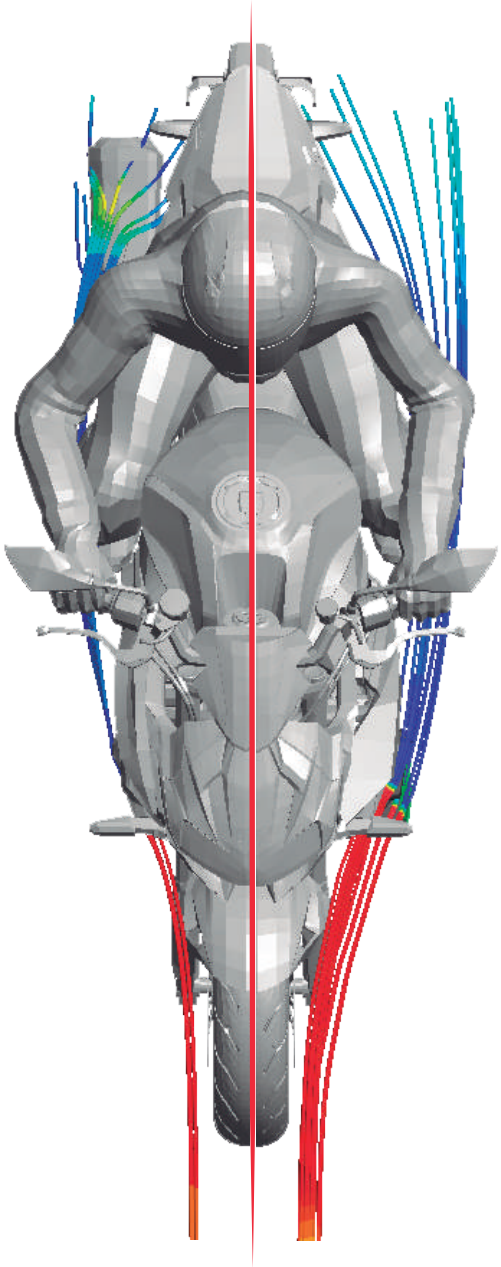

Pressure on spoiler surface:

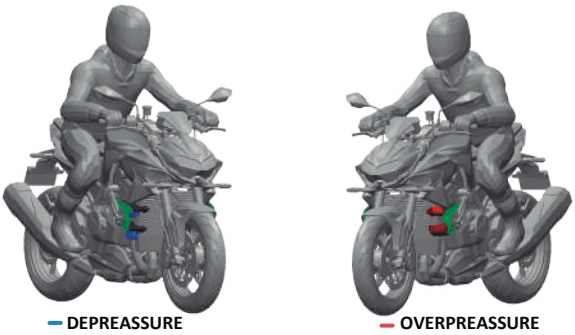

Due to its angles and frontal surface, it creates an overpressure on the top of the spoiler.
The turbulance create below, generates a difference of pressure between the upper and lower part of the spoiler. Which ultimately generates the aerodynamic downforce.

SPOILER'S DOWNFORCE

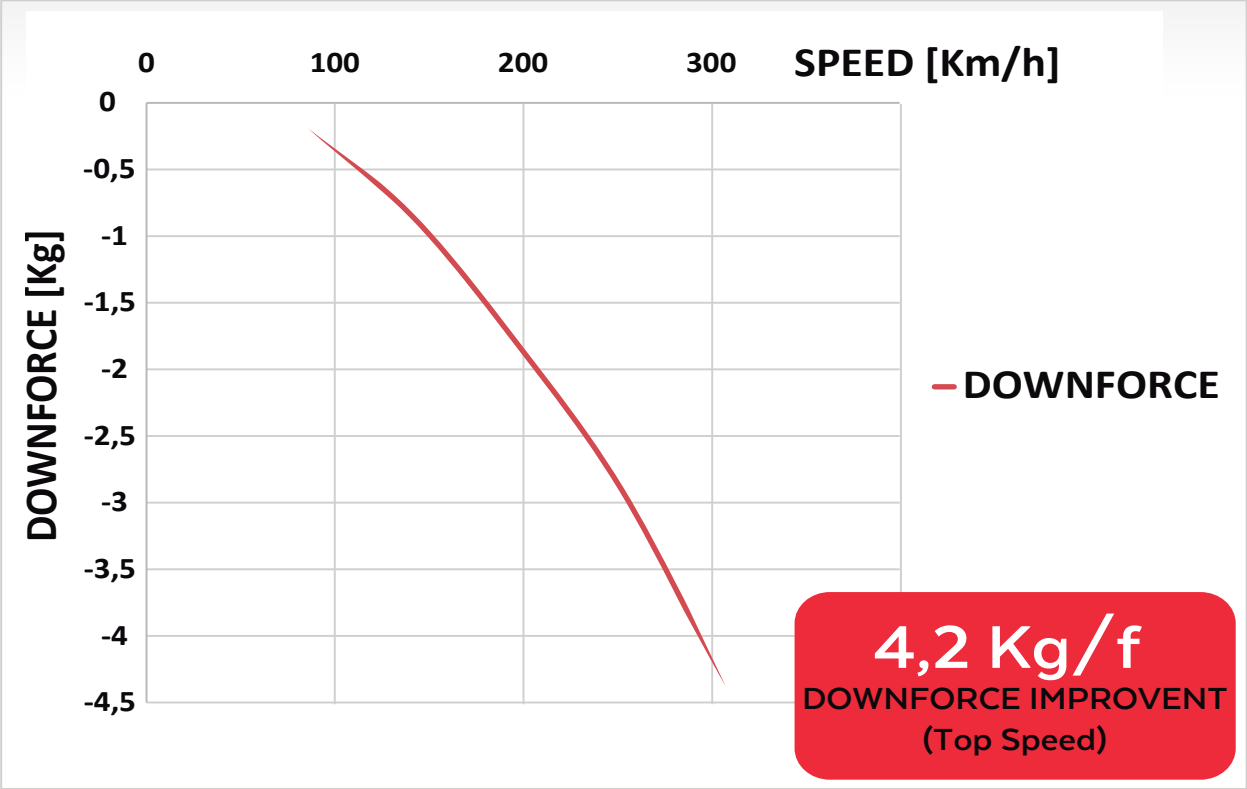

Downforce-Speed Chart:
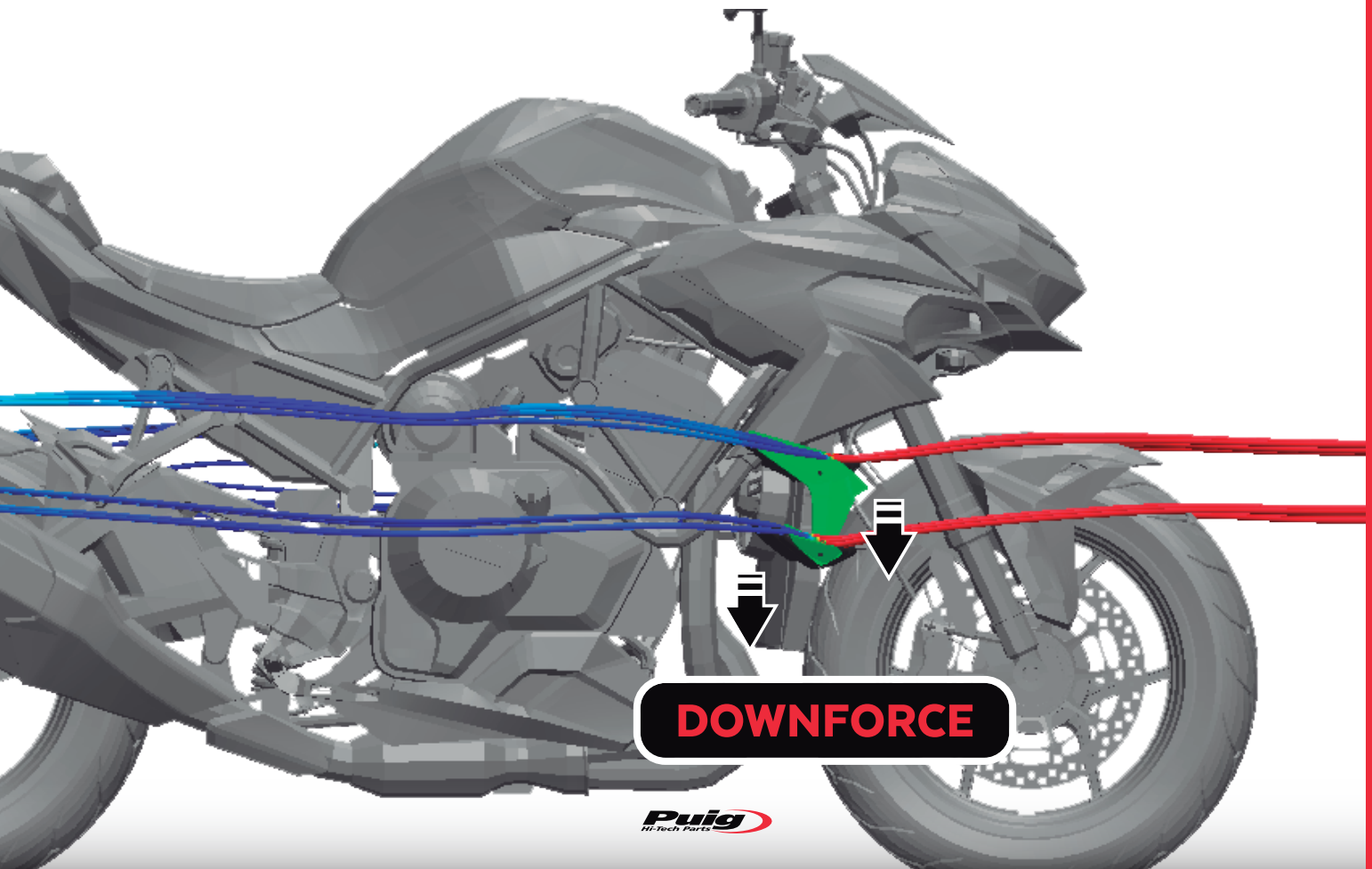
The force that the spoilers generate can be calculated by the difference of the results obtained in the previous chart.